

TECHNICAL FEATURES

QUALITY



World class materials
Class F insulation
Durable sealing
Premium bearings
Strong body design - FEM designed
Vacuum insulation
FMEA analysis
3D quality check

EFFICIENCY



Optimized power/weight ratio
S1 continuous duty service
Optimized electric design

RELIABILITY



PTC thermistor 130°
Specific grease retaining device
Tropicalized standard
IP66 insulation
Class F insulation

FLEXIBILITY



Easy mass adjustments
Various voltages and frequencies available
Easy access to the terminal box
Multiple eye-bolt



Standard specifications

Specification	Standard	Increased Safety	Explosion Proof	Hi-stroke Milling
Power supply	Three-phase from 12V to 690V, 50Hz or 60Hz; Single phase 110V 60Hz and 220V 50Hz. Three-phase motors are designed for inverter application from 20Hz to base frequency.	Three-phase from 230V to 460V, 50Hz or 60Hz.	Three-phase from 230V to 690V, 50Hz or 60Hz. All motors are designed for inverter application from 20Hz to base frequency.	
Time rating	Continuous rating (S1).			
Protection structure	Mechanical protection IP66 according to EN 60529.			
Bearing	Ball bearing from size MICRO to 50, roller bearing from size 50 (for some types only) to 110.	Ball bearing from size 10 to 50, roller bearing from size 50 (for some types only) to 90.	Roller bearing.	
Coating colour	Polyester powder painting. Standard colour RAL 2009.			
Installation and operating environment	For indoor and outdoor use.			
	Ambient temperature: -20°C to +40°C. Up to +55°C available on request.	Ambient temperature: -20°C to +40°C.	Ambient temperature: -20°C to +40°C. Up to +55°C available on request.	Ambient temperature: -20°C to +40°C.
Standard supported	Conformity with European Directive Low voltage 2006/95/EC EMC 2004/108/EC Machine directive 2006/42/EC ATEX 94/9/EC			
Mass covers	Aluminium. Steel for motors from size 60 to 90. Stainless steel AISI 304 for direct current motovibrators.	Aluminium. Steel for motors from size 60 to 90.	Stainless steel AISI 304.	Steel.
Windings	2, 4, 6 and 8 poles three-phase asynchronous motor from size 10 to 110; 2 poles single phase from size 10 to 30.	2, 4, 6 and 8 poles three-phase asynchronous motor.		8 and 10 poles three-phase asynchronous motor.
	Class F insulating materials (155°C). Vacuum impregnated windings; PTC thermistor 130°C standard from size 60.			
Flange	Grey cast iron up to size 90, ductile cast iron from size 100.			
Frame	Aluminium up to size 50, ductile cast iron from size 60.			
Shaft	Steel alloy high stress resistant.			
Eccentric weights	Completely adjustable.			

Vibrator ranges

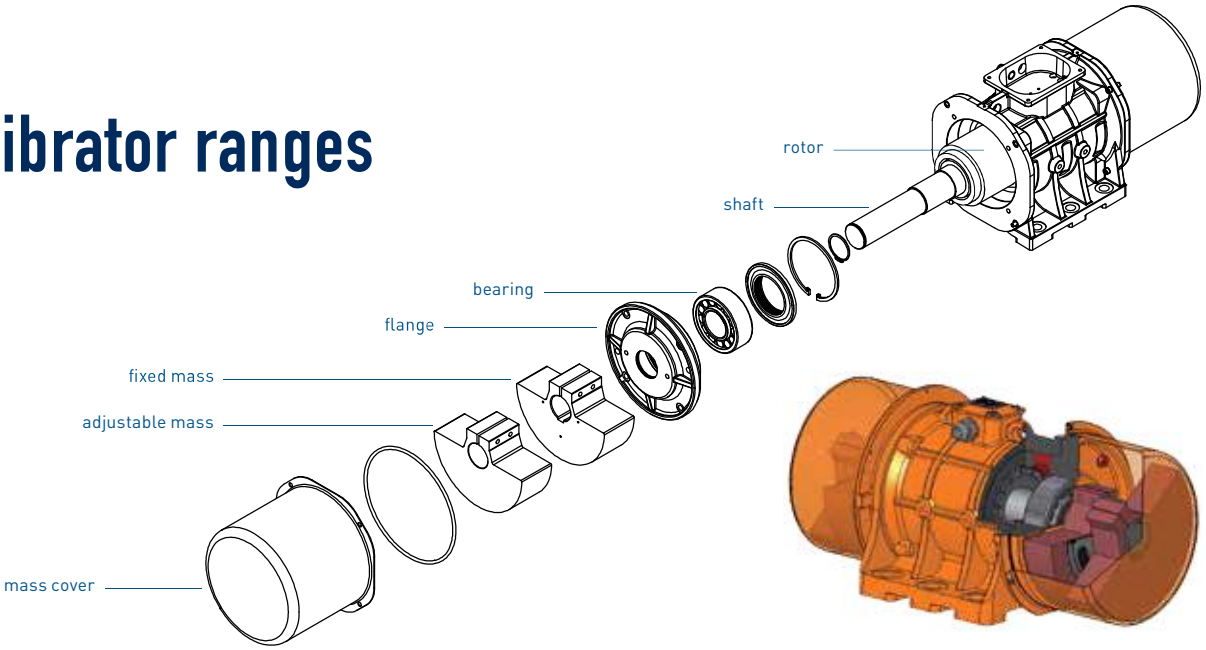

Providing centrifugal force up to 26.000 kgs and with multiple voltage options, mve range of electric motovibrators covers several fields of application in every country as well as many different industrial sectors: from food to mining, from foundry to recycling and more.

MVE electric motovibrators are designed and manufactured using the latest technologies and premium quality materials and components.

Motor bodies, bearing flanges and shafts are FMEA designed and manufactured using first grade Aluminium alloy, cast iron and steel alloy to withstand heavy duty applications and guarantee safe operation in any condition.

Vacuum impregnated windings and class F insulating materials enhance reliability and durability.

Top quality bearings and an efficient grease retaining system assure long lasting performance and low noise generation.

Adjustable eccentric weights allow easy fine tuning of the Max centrifugal force provided by the motor.

Several certifications for use in hazardous environments are available in the MVE range to match the most demandin g specification worldwide.

Model			Poles	Vibrating Force (kg)	Voltage Class (V)	Speed at 50Hz/ 60Hz (rpm)	Input Power (kW)
Standard	2-8 poles	MVE	2	66 - 9,375	Three-phase from 220V to 690V, 50Hz or 60Hz.	3,000/3,600	0.04 - 16.5
			4	25 - 15,153		1,500/1,800	
			6	53 - 25,532		1,000/1,200	
			8	105 - 22,610		750/900	
	Micro	MVE-MICRO	2	20 - 65	Three-phase from 230V to 460V, 50Hz or 60Hz. Single phase 115V 60Hz and 230V 50Hz.	3,000/3,6000	0.03 - 0.07
	Single Phase	MVE-M	2	66 - 320	110V 60Hz and 220V 50Hz.	3,000/3,600	0.08 - 0.28
	Direct Current	MVE-DC	3	50 - 200	12V and 24V.	3,000/3,600	0.08 - 0.16
Increased Safety	2-8 poles	MVE-E	2	206 - 4,052	Three-phase from 220V to 690V, 50Hz or 60Hz.	3,000/3,600	0.12 - 10
			4	194 - 10,643		1,500/1,800	
			6	51 - 13,009		1,000/1,200	
			8	105 - 9,952		750/900	
Explosion Proof	2-8 poles	MVE-D	2	794 - 4,052		3,000/3,600	0.35 - 3.9
			4	714 - 5,495		1,500/1,800	
			6	513 - 4,697		1,000/1,200	
			8	179 - 3,792		750/900	
Hi-stroke Milling	8-10 poles	MVE-MILLING	8	1,203 - 1,480		750/900	0.65 - 0.78
			10	947 - 1,364		600/720	

Certifications

Model	Certifications	Category	Type of protection	Temperature rating	Directive
Standard Range		Ex II3D ClassII Div.2 Groups F, G NEMA4	Enclosure Ex tD A22 Tx IP66	Micro and up to size 50 = T100°C From size 60 up = T135°C	Conformity with European Directive Low voltage 2006/95/EC EMC 2004/108/EC Machine directive 2006/42/EC ATEX 94/9/EC UL 1836, UL 1004-1 CSAC22,2 NO 25, 100, 145
Standard Range (zone 21)		Ex II2D ClassII Div.2 Groups F, G NEMA4	Enclosure Ex tb A21 IIIC Tx Db IP66	Micro and up to size 50 = T100°C From size 60 up = T110°C	
Increased Safety		Ex II2GD	Increased safety Ex e II T3 Ex tD A21 T150°C IP66	T3 T150°C	Conformity with European Directive Low voltage 2006/95/EC EMC 2004/108/EC Machine directive 2006/42/EC ATEX 94/9/EC
Explosion Proof		Ex II2GD ClassI Div.1 Groups C, D ClassII Div.1 Groups E, F, G IP66	Flame proof Ex d IIB T4 Ex tD A21 IP66 T135°C Ex db IIB T4, Ex tb IIIC T135°C	T4 T135°C	Conformity with European Directive Low voltage 2006/95/EC EMC 2004/108/EC Machine directive 2006/42/EC ATEX 94/9/EC UL 1836, UL 1004-1, UL 674 CSAC22,2 NO 25, 100, 145
Explosion Proof D5		Ex II2G ClassI Div.1 Groups C, D IP66	Flame proof Ex d IIB T3 IP66 Ex db IIB T4	T3	
Hi-stroke Milling		Ex II3D	Enclosure Ex tD A22 Tx IP66	T135°C	Conformity with European Directive Low voltage 2006/95/EC EMC 2004/108/EC Machine directive 2006/42/EC ATEX 94/9/EC

How to choose the motovibrator

1.

Choose RPM and the amplitude “e” (0 - peak) suitable for your application:

Circular vibration

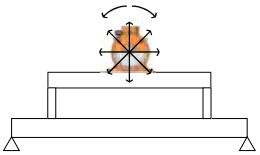

Linear vibration

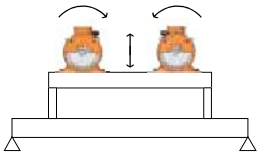

Application processes	Vibration		Rotation Per Minute					
			50Hz	750	1000	1500	3000	6000
	Circular	Linear	60Hz	900	1200	1800	3600	-
Conveying		✓			✓	✓		
Separation / Screening / Sizing		✓			✓	✓		
Positioning / Feeding		✓		✓	✓			
Filters cleaning	✓						✓	
Silos, hoppers emptying	✓						✓	
Separators (food)		✓		✓				
Bin activators	✓					✓	✓	
Compaction	✓						✓	✓
Concrete consolidation	✓	✓					✓	✓

RPM	e (mm)	
	Min.	Max.
3600	0.3	1.6
3000	0.3	1.6
1800	0.8	3.4
1500	1.2	3.8
1200	1.6	4.2
1000	2.4	7.6
900	2.9	8.1
750	2.4	7.8

2.

Choose an MVE from the tables of the following pages and put its Wm this formula:

CIRCULAR VIBRATION

$$s = \frac{Wm \cdot 10}{MW + VMW}$$

LINEAR VIBRATION

$$e = \frac{Wm \cdot 10}{2 \cdot MW + VMW}$$

s = stroke (mm)

e = amplitude (mm)

Wm = Working Moment (kgcm)

MW = Motor Weight (kg)

VMW = Vibrating Machine Weight (kg, without material)

Please, note that:

$$Wm = e \cdot (MW + VMW)$$

3.

Check the obtained value “e”:

- If it is similar to the required one (step 1) ➡ the MVE model is correct
- It is not similar to the required one (step 1) ➡ repeat the process (step 2) with a different MVE model.

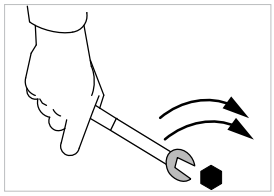

For tips on installation see appendix.

Important

Several voltages are available to match the local electric specifications worldwide both at 50Hz and 60Hz.

All OLI motors can be operated with double voltage by simply changing the connections inside the terminal box from Star to Delta or vice-versa.

Three-phase MVEs with **double rated voltage on the motor label** have a Star connection as a default so it can be operated at the higher voltage specified on the label; they can also be operated at the lower voltage indicated on the label by simply changing the connection inside the terminal box from Star to Delta.

Three-phase MVEs with **only one rated voltage written on the motor label followed by “(Delta)”** have a Delta connection as a default so to be operated at that voltage; they can also be operated at higher voltage by simply changing the connection inside the terminal box from Delta to Star.

VOLTAGE Delta / Star	Frequency	Standard
200-230 / 345-400	50 / 60	✓
220 (Mono)	60	
220-240 / 380-415	50	✓
230 / 460 *	60	✓
230 (Mono)	50	
330 / 575 *	60	✓
220-277 / 380-480	60	✓
500-525 (Delta)	50	✓
290-300 / 500-525	50	✓
380-480 (Delta)	60	✓
575 (Delta) *	60	✓
380-415 (Delta)	50	✓
460 (Delta) *	60	✓
115 (Trifase)	50 / 60	
115 (Mono)	60	✓
115 (Mono)	50	✓
48 / 80	50 / 60	

*** Voltage Tolerance: ± 10%**



INSTALLATION

Mounting

The baseplate surface where the vibrator motor is mounted, has an allowable tolerance of 0.25mm (0.01in), (refer to p 43) so that the surfaces rests uniformly against each other to avoid internal tension, that may cause breakage of the foot of the vibrator motor.
Use 8.8 type bolts, 8.8 type nuts and flat washers that belongs to category A EN ISO 7089 / 7092.

The graph below show the correct torque settings for the different bolt sizes used on the motor vibrators.

Motor / Machine interface

Screw		Washer		Clamping torque	
Metric	Imperial	Metric UNI 6592	Imperial Flat washer	(Nm)	(ft-lb)
M6	1/4"	6.4 x 12	1/4"	9	6,5
M8	5/16"	8.4 x 16	5/16"	23	16,5
M10	3/8"	10.5 x 20	3/8"	45	33
M12	1/2"	13 x 24	1/2"	80	58
M16	5/8"	17 x 30	5/8"	185	137
M20	13/16"	21 x 37	13/16"	373	275
M22	7/8"	23 x 39	7/8"	550	411
M24	15/16"	25 x 44	15/16"	696	513
M27	1"	28 x 50	1"	873	645
M36	1-3/8"	37 x 66	1-3/8"	1864	1370

FIXING

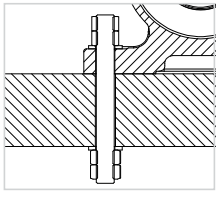

Smooth through hole
+ double headed bolt

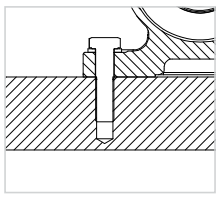

Tapped threaded
hole + screw

SURFACE FLATNESS TOLERANCE

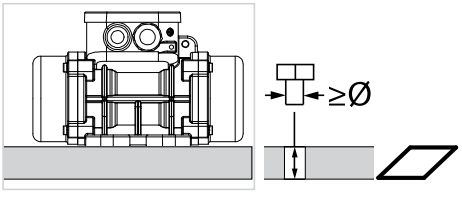

Max 0.25mm (0.01in)

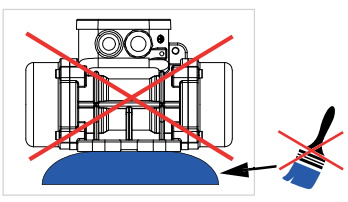



Electrical connection

Make sure the voltage and frequency supply match the one indicated on the rating plate of the electric vibrator.

If the motor is operated via a variable frequency drive do not run it under 20 Hz.
Insert the power cable through the cable gland. The lead-in wires have to be of eyelet-type, pre-insulated, with a bore that suits the pins of the junction box in order to prevent overheating. Use only conductors that have a suitable cross-section.

Connect the lead wires to the pins (as shown in the diagram below) and tighten them with the specified torque:

Do not forget to fix the earthing cable (compulsory connection)!
Before closing the junction box make sure the cover gasket is properly fitted in order to keep the specified IP protection.
For more details about motor installation refer to product manuals.

Junction box nuts tightening torque		
Screw	Nm	ft*lb
M4	2.5	1.84
M5	4	2.95
M6	5	3.69
M8	6	4.43
M10	8	5.90

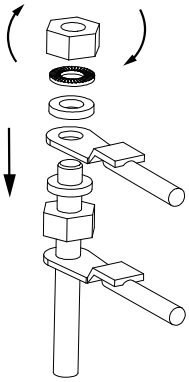

Overload protection

All electric vibrators MUST be connected to a suitable external overload protection.
When using two electric vibrators in sync, each of them has to be connected to an external overload protector and these overload protectors must be interlocked to make sure both motors are stopped if one fails.

Always use a thermal-magnetic type motor protector, with a delayed cut-off, to avoid stopping the motors during the start-up phase when the current drawn is higher than the rated running current for a few seconds.
Cut-off of the overload protection should be set at a maximum of +10% of the rated current.

HOW TO CHANGE THE VIBRATION INTENSITY

Adjustable masses – Type A

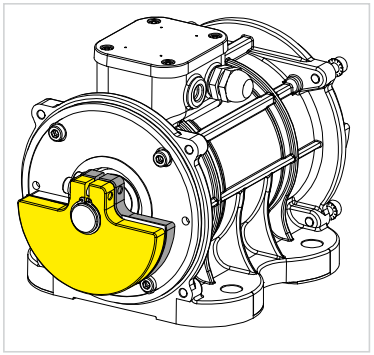

MASSES AT 100%

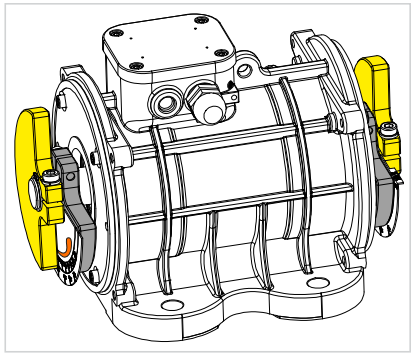

ADJUSTED MASSES

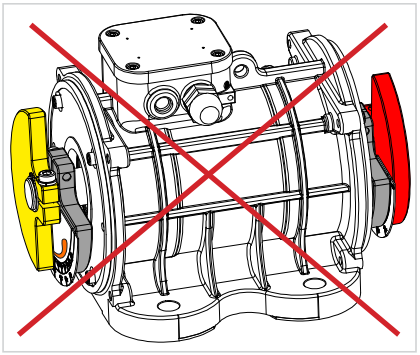

WRONG ADJUSTED MASSES

2 TIPS TO ADJUST THE MASSES PROPERLY:

Rotate the mass following the design on the plate: from the thicker tip towards the thin tip.

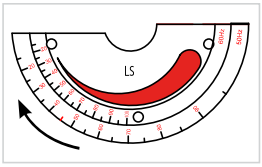

left side of the motor, for sizes up to 60

Rotate the masses in the opposite direction to the cable gland.

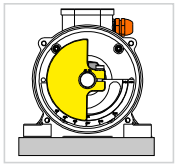

left side

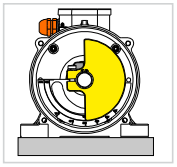

right side

Adjustable masses – Type B

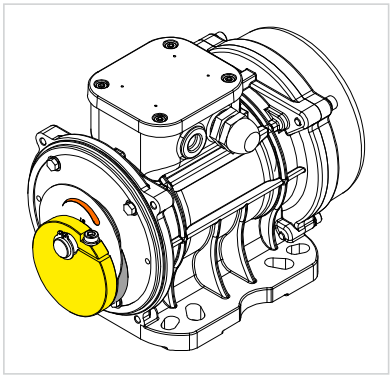

MASSES AT 100%

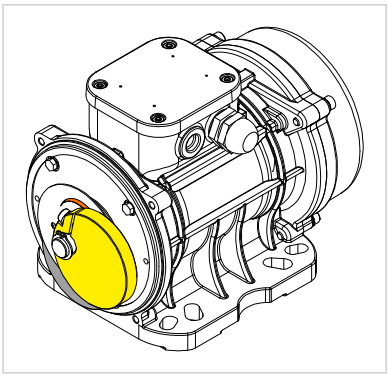

ADJUSTED MASSES

The fissure in the mass indicates the degree of adjustment.

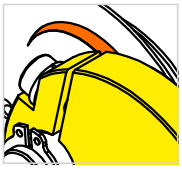

Rotate the mass following the design on the plate: from the thicker tip towards the thin tip.

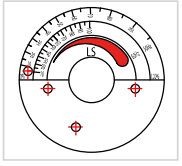



Adjustable masses – Type C (blade masses)

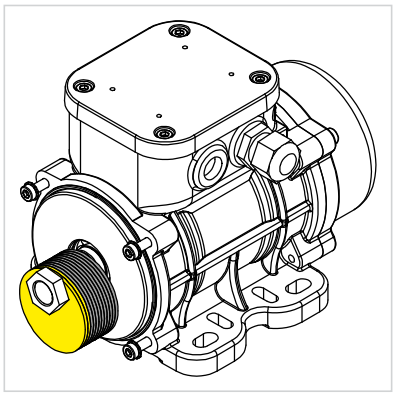

MASSES AT 100%

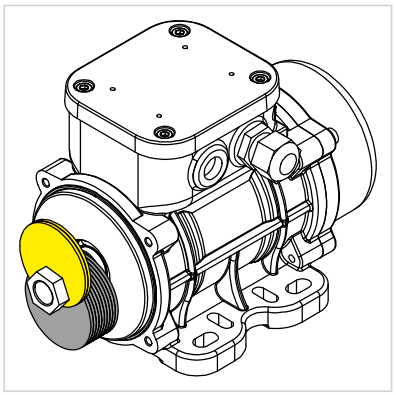

ADJUSTED MASSES

For technical information on the regulation of blade masses refer to the use and maintenance manual.

Warning:
DO NOT grease new motors before installation.

Motors with roller bearings already come from the factory filled with the right quantity of grease while those with ballbearing do not need greasing.